STARPOWER

SEMICONDUCTOR **IGBT**

GD400HFT120C2SN_T4F

Molding Type Module

1200V/400A 2 in one-package

General Description

STARPOWER IGBT Power Module provides ultrafast switching speed as well as short circuit ruggedness.They are designed for the applications such as welding machine and inductive heating.

Features

- Low $V_{CE(sat)}$ Trench IGBT technology
- Low switching loss
- 10μs short circuit capability
- Low inductance case
- $V_{CE(sat)}$ with positive temperature coefficient
- Fast & soft reverse recovery anti-parallel FWD
- Isolated copper baseplate using DBC technology

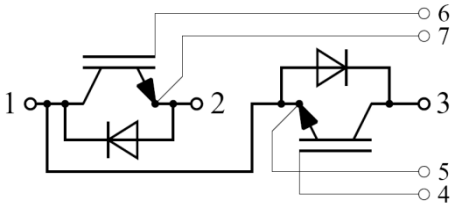

Equivalent Circuit Schematic

Typical Applications

- Switching mode power supply
- Inductive heating
- Welding machine

Absolute Maximum Ratings T_C=25℃ unless otherwise noted

Symbol	Description	GD400HFT120C2SN_T4F	Units
V_{CES}	Collector-Emitter Voltage	1200	V
V_{GES}	Gate-Emitter Voltage	±20	V
I_C	Collector Current @ T_C=25℃ @ T_C=90℃	585 400	A
I_{CM}	Pulsed Collector Current t_p=1ms	800	A
I_F	Diode Continuous Forward Current	400	A
I_{FM}	Diode Maximum Forward Current t_p=1ms	800	A
P_D	Maximum Power Dissipation @ T_j=175℃	2174	W
T_{jmax}	Maximum Junction Temperature	175	℃
T_{jop}	Operating Junction Temperature	-40 to +150	℃
T_{STG}	Storage Temperature Range	-40 to +125	℃
V_{ISO}	Isolation Voltage RMS,f=50Hz,t=1min	4000	V
Mounting Torque	Power Terminal Screw:M6 Mounting Screw:M6	2.5 to 5.0 3.0 to 5.0	N.m
Weight	Weight of Module	300	g

Electrical Characteristics of IGBT T_C=25℃ unless otherwise noted

Off Characteristics

Symbol	Parameter	Test Conditions	Min.	Typ.	Max.	Units
$V_{(BR)CES}$	Collector-Emitter Breakdown Voltage	T_j=25℃	1200			V
I_{CES}	Collector Cut-Off Current	V_{CE}=V_{CES},V_{GE}=0V, T_j=25℃			5.0	mA
I_{GES}	Gate-Emitter Leakage Current	V_{GE}=V_{GES},V_{CE}=0V, T_j=25℃			400	nA

On Characteristics

Symbol	Parameter	Test Conditions	Min.	Typ.	Max.	Units
$V_{GE(th)}$	Gate-Emitter Threshold Voltage	I_C=15.2mA,V_{CE}=V_{GE}, T_j=25℃	5.1	5.8	6.4	V
$V_{CE(sat)}$	Collector to Emitter Saturation Voltage	I_C=400A,V_{GE}=15V, T_j=25℃		2.05	2.45	V
		I_C=400A,V_{GE}=15V, T_j=125℃		2.40		

Switching Characteristics

Symbol	Parameter	Test Conditions	Min.	Typ.	Max.	Units
$t_{d(on)}$	Turn-On Delay Time	V_{CC}=600V,I_C=400A, R_G=2.4Ω,V_{GE}=±15V, T_j=25℃		362		ns
t_r	Rise Time			112		ns
$t_{d(off)}$	Turn-Off Delay Time			378		ns
t_f	Fall Time			115		ns
E_{on}	Turn-On Switching Loss			34.8		mJ
E_{off}	Turn-Off Switching Loss			19.0		mJ
$t_{d(on)}$	Turn-On Delay Time	V_{CC}=600V,I_C=400A, R_G=2.4Ω,V_{GE}=±15V, T_j=125℃		364		ns
t_r	Rise Time			113		ns
$t_{d(off)}$	Turn-Off Delay Time			405		ns
t_f	Fall Time			125		ns
E_{on}	Turn-On Switching Loss			43.0		mJ
E_{off}	Turn-Off Switching Loss			30.8		mJ
C_{ies}	Input Capacitance	V_{CE}=25V,f=1MHz, V_{GE}=0V		24.6		nF
C_{res}	Reverse Transfer Capacitance			1.38		nF
I_{SC}	SC Data	t_P≤10μs,V_{GE}=15V, T_j=125℃,V_{CC}=900V, V_{CEM}≤1200V		1600		A
R_{Gint}	Internal Gate Resistance			1.9		Ω
L_{CE}	Stray Inductance				20	nH
$R_{CC'+EE'}$	Module Lead Resistance, Terminal To Chip			0.35		mΩ

Electrical Characteristics of Diode T_C=25℃ unless otherwise noted

Symbol	Parameter	Test Conditions		Min.	Typ.	Max.	Units
V_F	Diode Forward Voltage	I_F=400A	T_j=25℃		1.95	2.35	V
			T_j=125℃		2.05		
Q_r	Recovered Charge	I_F=400A, V_R=600V, R_G=2.4Ω, V_{GE}=-15V	T_j=25℃		20.2		μC
			T_j=125℃		43.0		
I_{RM}	Peak Reverse Recovery Current		T_j=25℃		226		A
			T_j=125℃		340		
E_{rec}	Reverse Recovery Energy		T_j=25℃		10.1		mJ
			T_j=125℃		27.2		

Thermal Characteristics

Symbol	Parameter	Typ.	Max.	Units
$R_{\theta JC}$	Junction-to-Case (per IGBT)		0.069	K/W
$R_{\theta JC}$	Junction-to-Case (per Diode)		0.098	K/W
$R_{\theta CS}$	Case-to-Sink (Conductive grease applied)	0.035		K/W

Package Dimensions

Dimensions in Millimeters

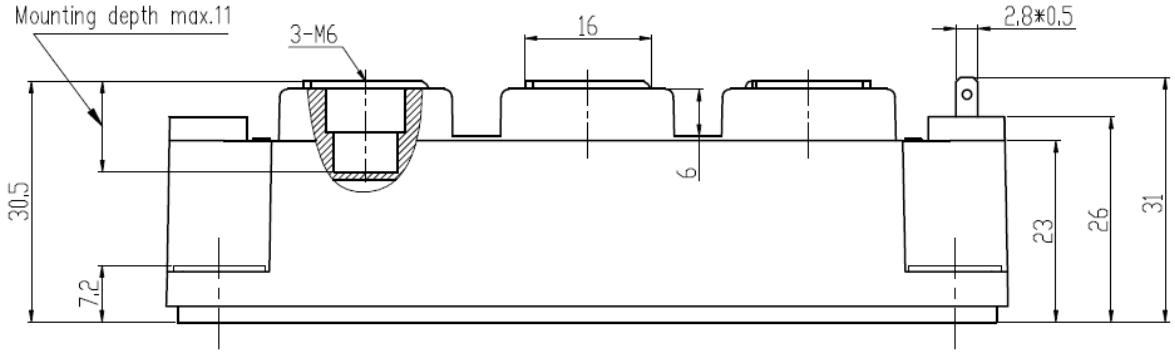

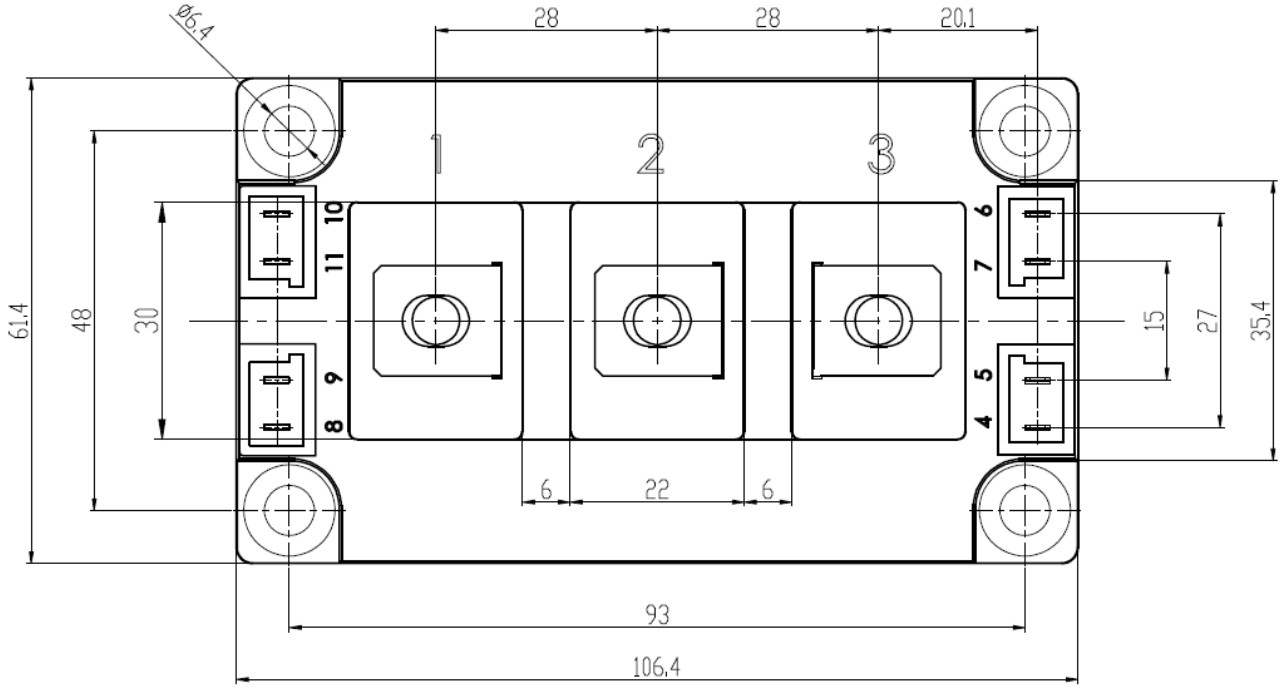

Terms and Conditions of Usage

The data contained in this product datasheet is exclusively intended for technically trained staff. you and your technical departments will have to evaluate the suitability of the product for the intended application and the completeness of the product data with respect to such application.

This product data sheet is describing the characteristics of this product for which a warranty is granted. Any such warranty is granted exclusively pursuant the terms and conditions of the supply agreement. There will be no guarantee of any kind for the product and its characteristics.

Should you require product information in excess of the data given in this product data sheet or which concerns the specific application of our product, please contact the sales office, which is responsible for you (see www.powersemi.cc), For those that are specifically interested we may provide application notes.

Due to technical requirements our product may contain dangerous substances. For information on the types in question please contact the sales office, which is responsible for you.

Should you intend to use the Product in aviation applications, in health or live endangering or life support applications, please notify.

If and to the extent necessary, please forward equivalent notices to your customers.
Changes of this product data sheet are reserved.